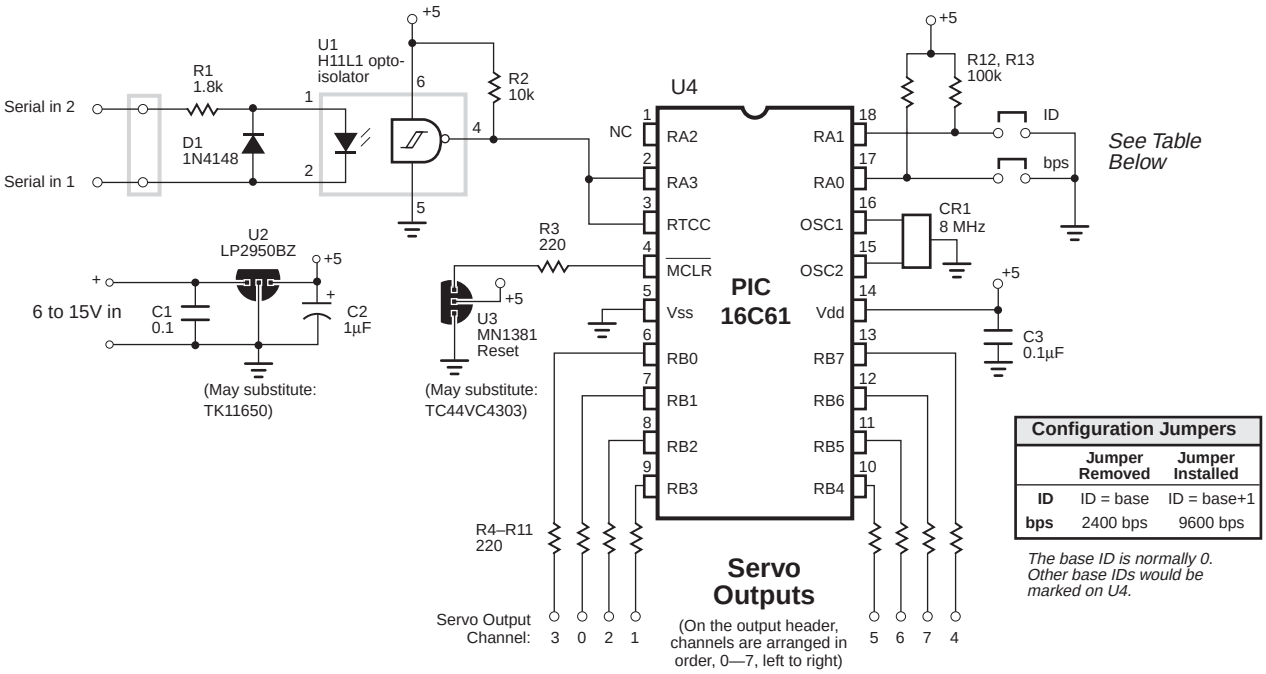

Configuration Jumpers		
	Jumper Removed	Jumper Installed
ID	ID = base	ID = base+1
bps	2400 bps	9600 bps

The base ID is normally 0. Other base IDs would be marked on U4.

Schematic diagram of the Mini SSC.